The new dimension to mobile ice maintenance

Catalogue
Pinguino

WM TECHNICS

Catalogue
Pinguino

INDEX

Company 5
Pinguino 11
Strengths 43
Products 47

5_9

COMPANY

Young, dynamic, and innovative:
At WM technics, progress and
customer satisfaction come first.

Established in 1986, WM technics crafts premium ice resurfacing machines suitable for every surface and requirement. Our state-of-the-art models stand out with their advanced technology, user-friendly operation, certified safety, and contemporary design.

Ice resurfacing machine WM 2300
Year of construction 1986

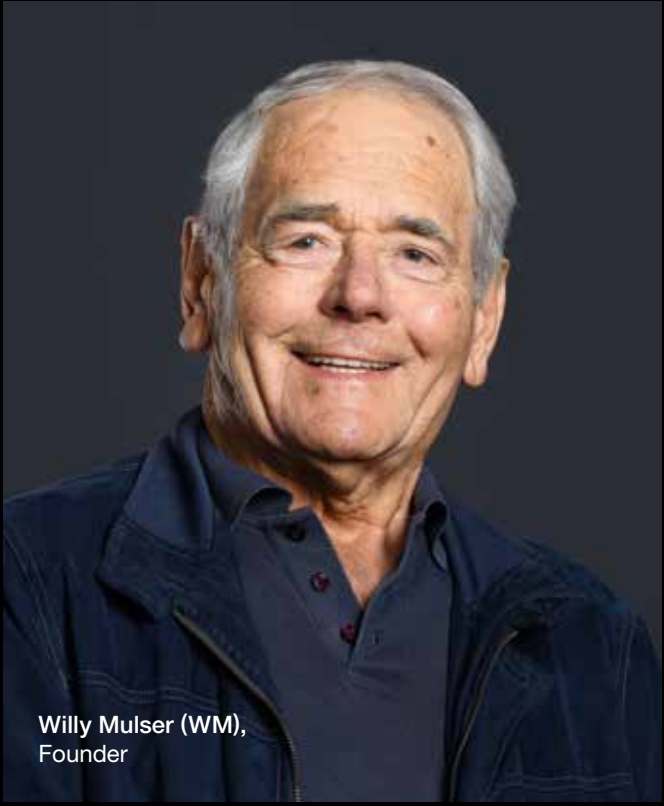

Willy Mulser (WM),
Founder

Here's what we have to offer

Whether catering to professional ice needs within an arena or on a mobile rink, the distinction is minimal: WM technics consistently offers the optimal solution for any requirement. Owing to our relentless pursuit of product excellence, we pioneer cutting-edge standards and stand as a prominent leader in the worldwide market.

Powered by our robust digital infrastructure; design, parts production, and the assembly of ice resurfacing machines are conducted at our South Tyrol-based facility (Italy).

In this manner, WM technics guarantees unparalleled quality, attending to every intricate detail. Custom setups built on customer specifications, reduced maintenance commitment, and steadfast assistance affirm WM technics as a powerful ally.

Marcel,
Assembly Team

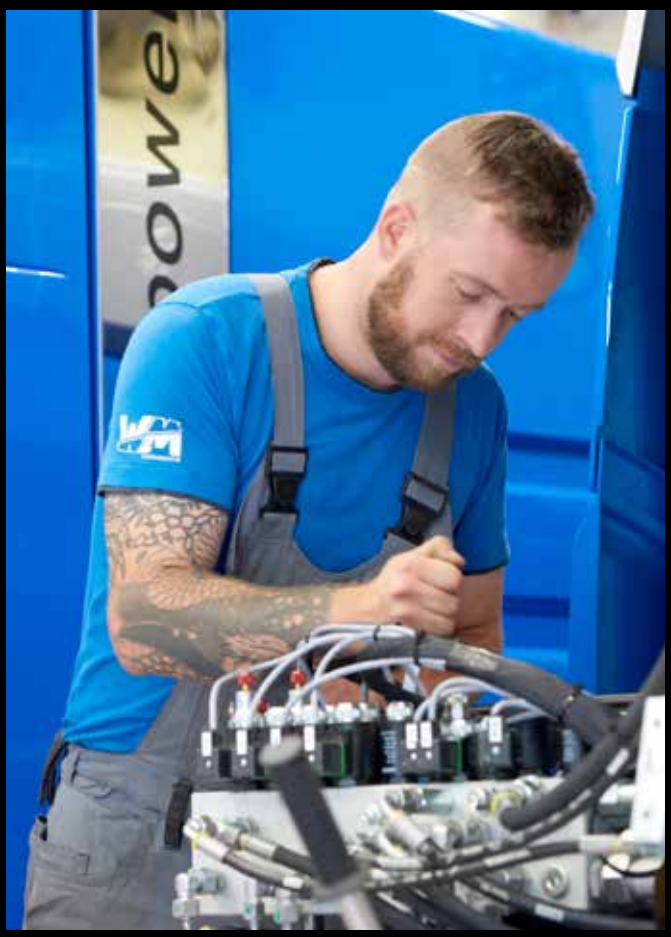

VITRAC

WM plus

Always Ahead of the Curve

With precision, we delve into research, trials, and systems. Our team's years of prowess in development, manufacturing, and setup culminate into a harmonious synergy.

Safety at its Finest

Our cardinal rule: Prioritizing safety and well-being. WM technics' ice machines are designed with intuitiveness and uncompromised safety, meeting European machinery guidelines.

Design with a Spark

WM technics brings to life trailblazing ice machines, always keeping the client and entire production lifecycle at heart.

Precision Production

WM technics manufactures all its turning and milling components with utmost precision in its production department, only sourcing standard parts from reputable manufacturers. Each component is then customized in detail based on its function and crafted with the greatest care.

Streamlined Assembly

WM technics champions the rapid production of ice machines, backed by rigorously organized processes. Every move is intricately mapped and transparent. Our commitment to precision minimizes the need for maintenance.

360-Degree Quality

WM technics designs and produces innovative ice resurfacing machines that meet all efficiency, reliability, longevity, and ease-of-use requirements. Series construction and in-house production also allow for the detailed tracking of all fabrication stages and utilized components.

Sustainability with Vision

WM technics machines are designed to stand the test of time. We advocate for enduring products while keeping an eye on operational expenses. Balancing energy conservation, reduced consumption, and profitability doesn't deter us from delivering peak performance.

Customer-Centric Assistance

Just as our machines care for the ice, we cherish our relationships with our customers: not only before the purchase but also during the commissioning and afterwards. We meet our clients' unique requirements even during the production process, tailoring our approach to their needs.

Pinguino

LITHIUM
PETROL / GASOLINE

11_41

PINGUINO

Handy and easy to use: the new
ice resurfacer by WM technics is here
and ready to turn ice into perfect ice.

The handy ice resurfacer for events and mobile rinks, ideal for ice surfaces up to 800 m² / 8,600 ft².

Whether it's a sports event or an ice skating rink, you can easily keep your designated ice surface flawlessly maintained with Pinguino.

This innovative, compact ice resurfacer (measuring 3 meters in length and 2 meters in height / 10 ft length x 6.5 ft height) performs on par with larger professional machines: it efficiently planes the ice, ensuring perfect quality. Plus, its unique front seating position for the driver offers excellent visibility and a comfortably enjoyable driving experience.

Modern design, high quality, and easy maintenance – ice resurfacing for mobile rinks has never been this professional and comfortable!

Snow tank volume	1 m³ / compacted 1.25 m³	35.3 ft³ / compacted 44.2 ft³
Water tank volume	340 l	90 gal
Blade width	1,400 mm	55 1/8 in
Fields of operations	Event / Small ice rinks	

"Agile, comfortable to use and outstanding ice resurfacing: With the Pinguino, we create the perfect ice conditions for our events!"

Raphael Fink
Pond Hockey Championship (Italy)

Safety and protective features

At WM technics, safety and health protection always come first. A thorough and independent inspection carried out by Suva, the accredited and recognized Swiss certification body, confirms compliance with the European Directive 2006/42/EC, which regulates the level of protection against machinery-related accidents to ensure user safety.

suva
CERTIFICATION

In compliance with Suva certification No. E 7164/2.e

Front seat

Ready, sit, go! On the Pinguino, the driver's seat is at the front, just like in a car, making operating the machine easier, even for less experienced users.

The front seating position ensures full vision, perfect peripheral vision, and ease of maneuvering, increasing safety for people, the machine, and the sports facility.

Full sight

Comfortable sitting position

Ease of maneuverability

Blade replacement

Replacing the blade is easy and quick. There's no need to detach the conditioner. Just flip it upwards and remove the blade. Done!

You can quickly and safely replace the blade with just a few easy steps. You can change it effortlessly whenever needed, guaranteeing better ice quality throughout the season.

Quick & easy

Maximum safety

Constantly high ice quality

Replaceable runners

Simple, quick, and safe. The Pinguino's runners are made from a special material and can be replaced easily and in no time if damaged – minimizing downtime and ensuring reliable operation.

The material chosen for the runners makes them exceptionally smooth and reliable, protecting the ice surface from scratches or damage. It also adds an extra layer of safety for the sports facility: even if you forget to lift them when leaving the rink, neither the concrete nor the rubber mats will be damaged.

Simple & quick replacement

Max. smoothness on ice

Total protection of the rink

Perfect ice maintenance

The Pinguino might be compact, but it planes just like a big professional machine, ensuring top-notch ice resurfacing even on mobile rinks. Plus, the optional brush attachment guarantees clean edges.

Conditioner

Mechanical blade setting

Brush

Open snow tank

340 liters / 90 gallons of water

Enormous planing power

Easy emptying

Built-in charger

Loaded and ready to go. The charging station is built directly into the Pinguino, eliminating the need for bulky chargers in your garage—and putting an end to hauling cumbersome cables back and forth.

For charging, all you need is a standard, relatively thin 110-240 V cable – no special cables required. This also makes the machine easier to rent out: the charging station no longer needs to be packaged and shipped separately, greatly simplifying both logistics and handling.

Charging with standard cable

Greater durability & safety

Perfect for rental use

Lighting

Efficient lighting for the best visibility. The combination of LED lights and powerful headlights always ensures optimal visibility.

Front lighting

Side work light

Flashing warning light

Rear lighting

Energy efficiency

Perfectly integrated headlights

Excellent visibility

Highlight

Ease of transport

On to your next event? The low-weight Pinguino is fitted with lifting pockets for ease of transportation by forklift or trailer.

Retractable driver's seat (2 positions)

Lifting pockets for forklifts

Ease of transport

Space saving

Reduced weight

Easy handling

The Pinguino excels due to its easy handling. Its intuitive design and simple controls make it accessible to anyone, even those who have never driven anything similar.

Keep your ice surface in perfect condition and ensure safety for all activities. The Pinguino ensures optimal results.

Mobile ice rinks & frozen lakes

Training facilities

Occasional sports events

Highlight

Ease of maintenance

All machine parts are easily accessible without needing to dismantle any components, making maintenance quick, simple, and cost-effective while minimizing operational costs.

Tiltable seat

Easily accessible engine compartment

Good sight: Hydraulic oil level indicator

Easy maintenance service

Easily accessible engine compartment

Low maintenance costs

Faster maintenance service

TECHNOLOGY

Explore the Pinguino’s standard features and numerous optional extras. We are also happy to customize the Pinguino to meet your needs.

Lithium

Technical specifications

Motor	Asynchronous motor
Drive power	10 kW
Battery Lithium	BlueLi 80V – 230Ah
Charger Power @230V	3,3 kW
Charger Power @120V	1,8 kW
Battery charger supply voltage	110 - 230V ± 10%
Autonomy	approx. 2h 40 min.
Charging time for 80% @120V	approx. 8h 20 min.
Charging time for 80% @230V	approx. 4h 20 min.
Weight when empty	1,230 kg (basic outfit) 2,690 lbs
Water tank	340 l 90 gal
Snow tank	1 m³ / compacted 1.25 m³ 35.3 ft³ / compacted 44.2 ft³
Transmission	Continuously adjustable hydraulic four-wheel drive
Axles	Single wheel drive
Steering	Hydraulic
Footbrake	Hydraulic
Parking brake	Mechanical parking brake on rear wheels
Hydraulic system	18 cm³ axial piston pump for drive, 6 cm³ work units + cylinder movements, 4.4 cm³ steering
Diameter of screw conveyors	vertically ø 175 mm 6.9 in horizontally ø 170 mm 6.7 in
Tyres	5.00R12 83/81P 2 rows of spikes
Wheel rims	12” x 5” with hubcaps

In conformity with Suva no. E 7164/2.e type-examination certificates

Standard equipment

All-wheel drive
Parking brakes
2 board guide rollers
Water tank-snowbin made of stainless steel
Spring suspended drivers seat
Horn
Easily accessible engine compartment (tiltable driver’s seat, hydraulically tiltable snowtank)
Hydraulic power steering
2 hydraulically powered screw conveyors
Hydraulic carriage pressure system
Hydraulic opening and closing of snow bin cover
Manual blade adjustment
Tiltable planing device / conditioner for easy, safe blade changing
Tiltable operator’s platform (2 positions)
1 blade
1 towel
Scope of delivery set

Petrol / Gasoline

Technical specifications

Engine	Honda GX690RH, 2 cylinder 688 cm³
Power	16.5 kW / 22.1 HP - 3,600 rpm
Weight when empty	1,100 kg (basic outfit) 2,425 lbs
Water tank	340 l 90 gal
Snow tank	1 m³ / compacted 1.25 m³ 35.3 ft³ / compacted 44.2 ft³
Fuel tank	15 l 4 gal
Transmission	Continuously adjustable hydraulic four-wheel drive
Axles	Single wheel drive
Steering	Hydraulic
Footbrake	Hydraulic
Parking brake	Mechanical parking brake on rear wheels
Hydraulic system	18 cm³ axial piston pump for drive, 6 cm³ work units + cylinder movements, 4.4 cm³ steering
Diameter of screw conveyors	vertically ø 175 mm 6.9 in horizontally ø 170 mm 6.7 in
Tyres	5.00R12 83/81P 2 rows of spikes
Wheel rims	12” x 5” with hubcaps

Standard equipment

All-wheel drive
Parking brakes
2 board guide rollers
Water tank-snowbin made of stainless steel
Spring suspended drivers seat
Horn
Easily accessible engine compartment (tiltable driver’s seat, hydraulically tiltable snow tank)
Hydraulic power steering
2 hydraulically powered screw conveyors
Hydraulic carriage pressure system
Hydraulic opening and closing of snow bin cover
Manual blade adjustment
Tiltable planing device / conditioner for easy, safe blade changing
Tiltable operator’s platform (2 positions)
1 blade
1 towel
Scope of delivery set

In conformity with Suva no. E 7164/2.e type-examination certificates

Scope of delivery

1 blade in transport sheath

Towel felt

2 rubber mats

6 mm hex socket T wrench

Cross-key with nut

Laceration-proof safety gloves

Grindstone

Water connector

Fuse set

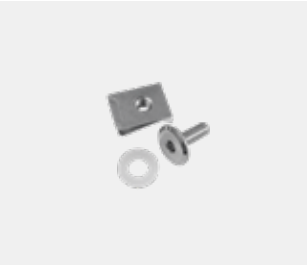

Set ABS fastening material

Safety and Lifting bar

Charging Cable
Lithium

Instruction manual

Online spare parts catalogue

Dimensions

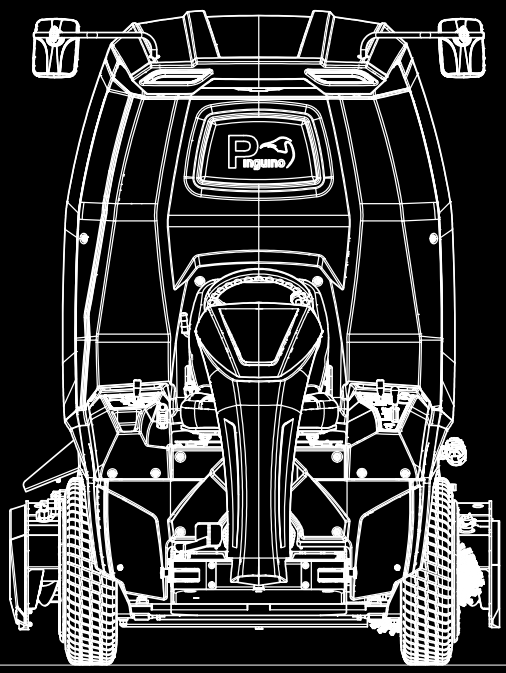

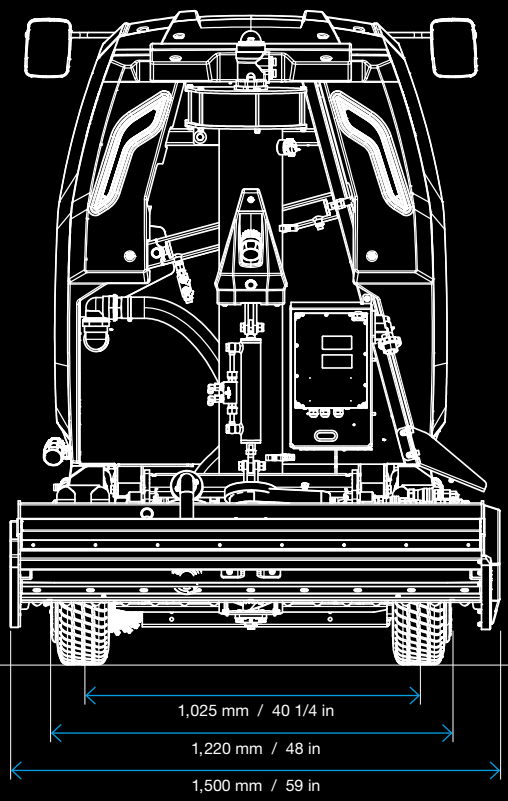
1,025 mm / 40 1/4 in
1,220 mm / 48 in
1,500 mm / 59 in

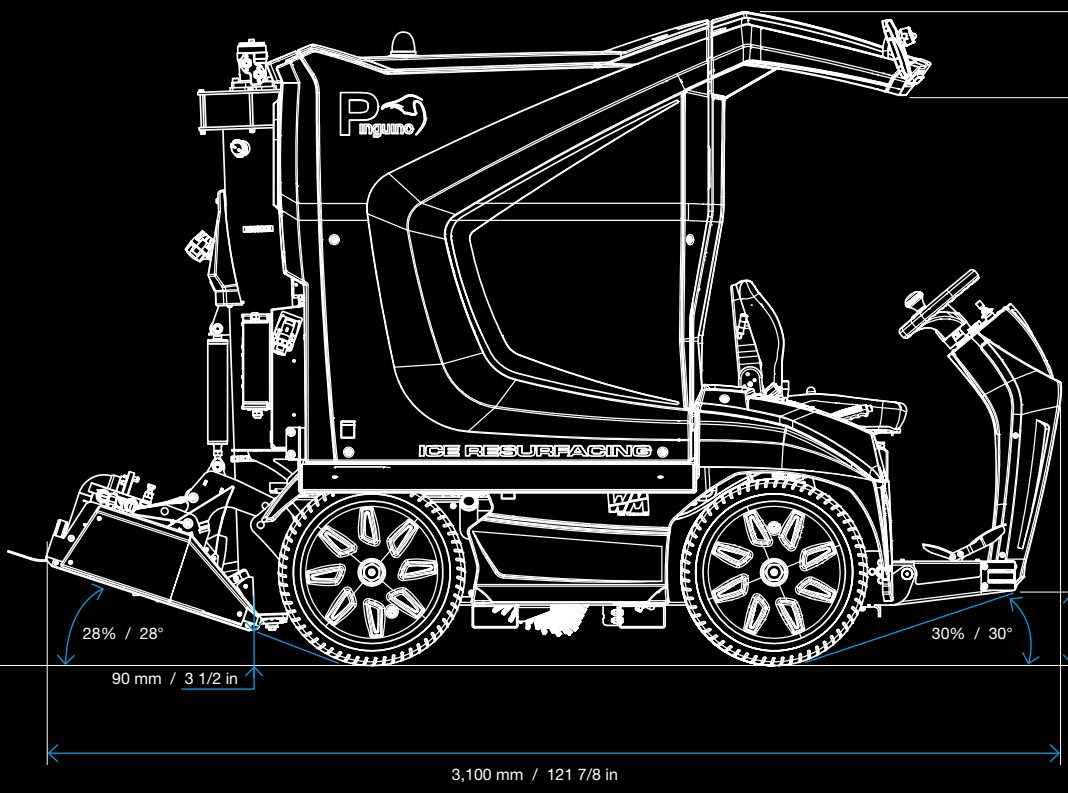
ICE RESURFACING
28% / 28°
90 mm / 3 1/2 in
30% / 30°
210 mm / 8 1/4 in
1,745 mm / 68 1/2 in
2,000 mm / 78 3/4 in
3,100 mm / 121 7/8 in

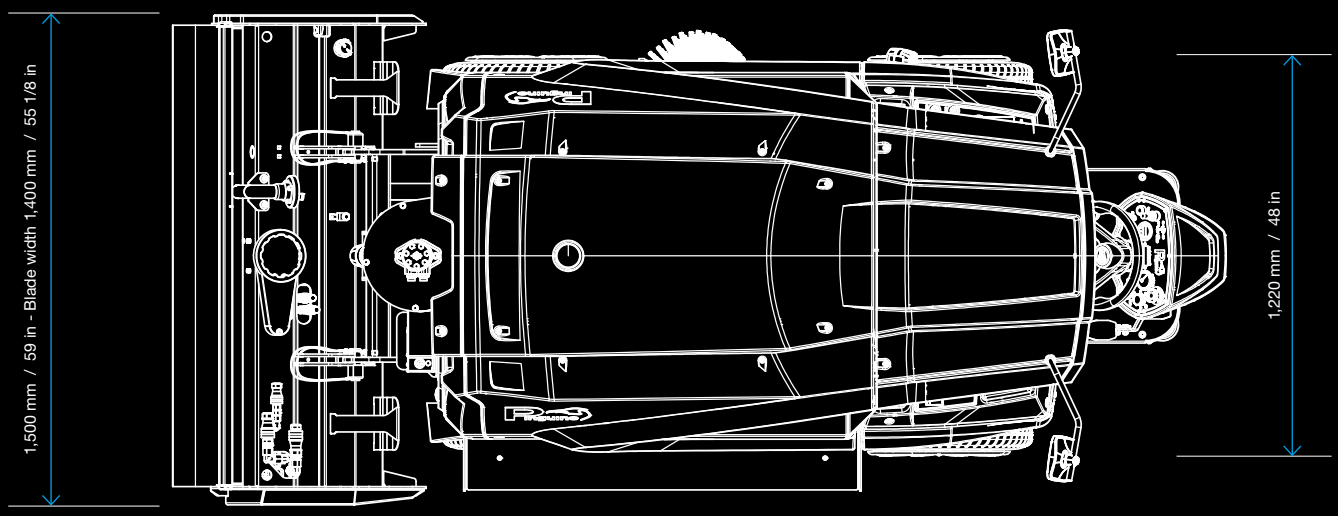
1,500 mm / 59 in - Blade width 1,400 mm / 55 1/8 in
1,220 mm / 48 in

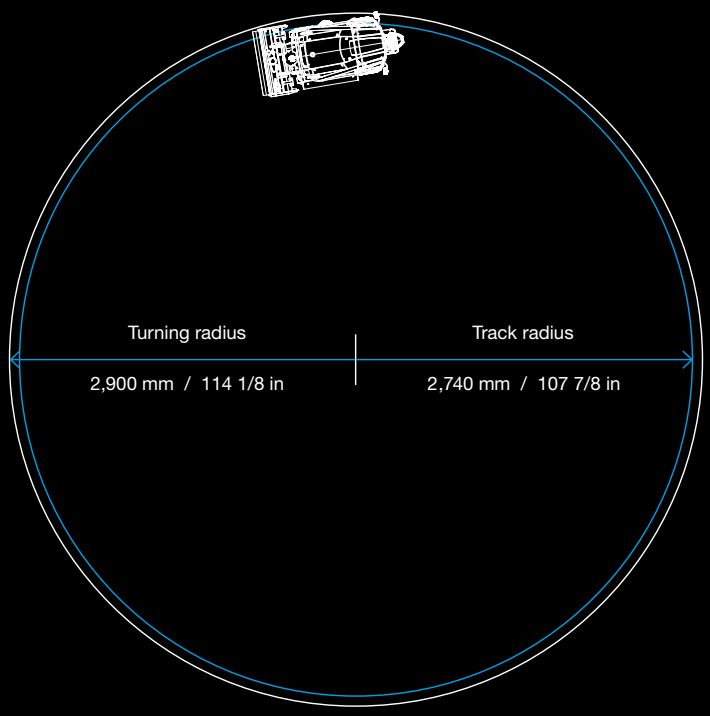
Turning radius
2,900 mm / 114 1/8 in
Track radius
2,740 mm / 107 7/8 in

Optional

Side mirrors
Flashing warning light
Front lights
ICE RESURFACING
Brush
Side work light

Wash system

Screw conveyor wash system vertical

Screw conveyor wash system horizontal

Dasher board processing

Brush

Overview and security

Side mirrors

Rear-view camera

Protective guard for board guide rollers

Comfort

Hydraulic blade adjustment

Slide extension

Water tank signage

Conveyor screw overload warning system

Acquastop valve with time relay

Lighting

Front and working lights (side, rear)

Flashing warning light

Personalization

Custom wrap
4c digital print

Service

Spare tyre 12”

Diagnostic cable

43_45

STRENGTHS

WM technics - Excellence in design and quality. In-house manufactured machines. Easy maintenance. Quick access to spare parts. Your guarantee for the highest standards.

At WM technics, we strive for excellence at every stage of our work. Our machines are the result of high-quality components and meticulous design that minimizes maintenance effort. Designed, manufactured, and assembled in our own facilities, we guarantee top quality and timely deliveries. From component to the finished product - every step is closely monitored to deliver to you the ice resurfacing machines of the future.

User friendliness

Through the use of top-quality components together with a well-planned design, maintenance work is extremely simple and is reduced to a minimum.

Quality guarantee

Our products are developed, manufactured, and assembled in-house at our facilities. This is the only way we can guarantee the best quality and punctual delivery times.

The right replacement part, every time

Order your spare parts easily and conveniently from our online portal: Our series number and digital image system enable you to find the part you need with just one click.

Series production

All WM technics vehicles are series-manufactured. We know exactly which parts have been used in each series run, and can deliver the correct spare parts to you at all times. At the same time, a number of optionals can be retrofitted with minimum effort and maximum precision, even years later.

Service and support

Our well-networked, international team of technicians undergo constant training and will be delighted to help you whenever you require assistance.

Quality consciousness

From the manufacture of individual parts right through to the final quality-control inspection: Every step of the process is carried out and monitored with the utmost precision. Each and every member of our staff is well-trained in his specialist field, and carries out all tasks conscientiously. This is a great advantage for our customers, who can be sure of receiving a technologically sophisticated product which has been manufactured to the very highest quality standards.

47_51

PRODUCTS

Dive into the world of WM technics: Where cutting-edge design meets top-notch quality. Here begins the journey to top-tier ice resurfacing machines and #perfectice.

Mammoth

An autonomous and innovative ice resurfacing machine, ideal for stadiums and large ice surfaces up to 2,600 m² / 28,000 ft².

Maintenance-free AC motors, generous tank volumes, and the quick-change blade system ensure fast and efficient ice preparation. The compact design and frame-mounted edger provide maximum stability and exceptional maneuverability.

Snow tank volume	3 m³ / compacted 3.6 m³ 106 ft³ / compacted 127 ft³
Water tank volume	1,000 l / 1,350 l / 1,750 l 264 gal / 356 gal / 462 gal + snow tank-water tank connection 2,000 l / 2,350 l / 2,750 l 528 gal / 620 gal / 726 gal
Blade width	2,100 mm / 2,300 mm / 2,500 mm 82 5/8 in / 90 1/2 in / 98 1/2 in Blade change < 60 seconds
Fields of operation	Pro / Ice stadiums

Shira

The machine adapts perfectly to every ice resurfacing requirement in stadiums with ice surfaces up to 2,600 m² / 28,000 ft².

It runs electrically and operates almost silently. The intuitive control via keyboard, display, and automatic mode enables particularly easy operation and maintenance. Thanks to excellent accessibility for manual interventions, it ensures noticeable cost savings and impresses with an outstanding price-performance ratio.

Snow tank volume	3 m³ / compacted 3.6 m³ 106 ft³ / compacted 127 ft³
Water tank volume	1,000 l / 1,350 l / 1,750 l 264 gal / 356 gal / 462 gal + snow tank-water tank connection 2,000 l / 2,350 l / 2,750 l 528 gal / 620 gal / 726 gal
Blade width	2,100 mm / 2,300 mm 82 5/8 in / 90 1/2 in
Fields of operation	Pro / Ice stadiums

evo²

The powerful ice resurfacing machine for intensive operations on large ice rinks and in stadiums – ideal for ice surfaces from 4,200 m² / 45,200 ft².

The generously combinable snow and water tank volume offers maximum flexibility, while diesel, gasoline, or electric motors provide the drive as needed.

The very fast blade change system, excellent overview of all operating functions, and automatic mode significantly facilitate handling. Thanks to quick access to the engine compartment, maintenance is also particularly fast and cost-efficient.

Snow tank volume	4.1 m³ / compacted 5.1 m³ 145 ft³ / compacted 180 ft³
Water tank volume	1,200 l / 1,400 l / 2,000 l 317 gal / 370 gal / 528 gal + snow tank-water tank connection 2,550 l / 2,750 l 674 gal / 726 gal
Blade width	2,300 mm / 2,500 mm 90 1/2 in / 98 1/2 in Blade change < 60 seconds
Fields of operation	Pro / Ice stadiums

Compact

The compact ice resurfacing machine was specifically designed for small ice surfaces and rinks up to 1,200 m² / 12,900 ft².

It is robust, easy to operate, and delivers shaving results like a large professional model. Thanks to its high maneuverability, it offers the driver first-class comfort and guarantees professional ice preparation – even on mobile ice rinks, it ensures ice quality at the highest level.

Snow tank volume	1.8 m³ / compacted 2.25 m³ 63.6 ft³ / compacted 79.5 ft³
Water tank volume	600 l 158 gal
Blade width	1,700 mm 66 7/8 in
Fields of operation	Event / Small ice rinks

Pinguino

The compact revolution among ice resurfacing machines: Thanks to its small dimensions, it moves with extreme agility and delivers precise, high-quality ice preparation for events and mobile ice rinks up to 800 m² / 8,600 ft².

It offers the performance of large professional machines – shaves the ice efficiently and ensures perfect ice quality at all times. The unique forward seating position provides the driver with excellent visibility and high driving comfort.

Snow tank volume	1 m³ / compacted 1.25 m³ 35.3 ft³ / compacted 44.2 ft³
Water tank volume	340 l 90 gal
Blade width	1,400 mm 55 1/8 in
Fields of operation	Event / Small ice rinks

Snip

The electrically operated, manually guided edger makes ice maintenance considerably easier.

Whether mobile ice rinks or large arenas – it combines a compact design with modern, emission-free technology. Its most innovative feature is the quick, tool-free switching between two operating modes: lateral milling along the boards and frontal milling to remove ice build-up and unevenness. With an integrated drive, adjustable speed, and certified safety, it is a versatile and precise tool for maintaining any ice surface.

Electric engine	24V / 130Ah (powered by a FAAM TRALEG battery)
Blade width	Ø 350 mm Ø 13.8 in
Fields of operation	Event / Ice stadiums

ICE RESURFACING

WM technics GmbH

Plant 1, Headquarters
Breiener Straße 15
I-39053 Blumau
T. +39 0471 353 332
info@wm-technics.com
wm-technics.com

Plant 2
Giuseppe-di-Vittorio-Straße 18
I-39100 Bozen

Follow us on

YouTube: *WM ice*
Facebook: *WM ice*
Instagram: *WM ice*
LinkedIn: *WM technics*

01 2026 / Subject to technical modifications.